DIAMOND & CBN GRINDING WHEELS — TECHNICAL DRAWINGS

Standard Profile Engineering Drawings with Dimensional Parameter Definitions (D, T, H, W, X, U, V, Angles)

FEPA / ISO PROFILES

Dimensions in millimeters (mm)

Type 1A1 (Flat Wheel)

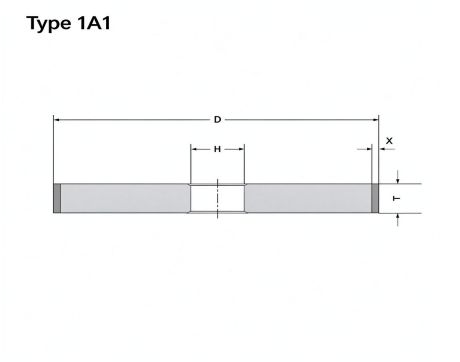

Params: D × T × H × W × X

Type 1V1 (Beveled Wheel)

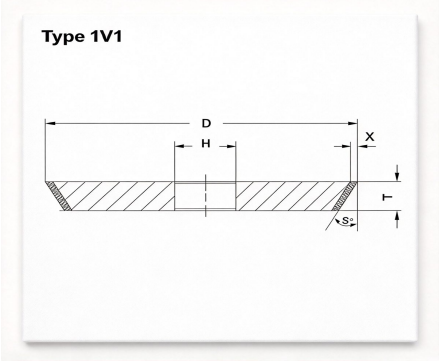

Params: D × T × H × V(°) × X

Type 14E1 (Double Beveled (V))

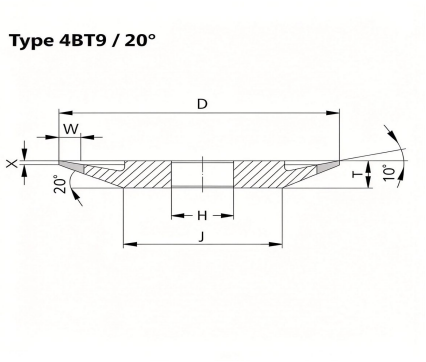

Params: D × T × H × V(°) × U × X

Type 4BT9 (20° Dish Wheel)

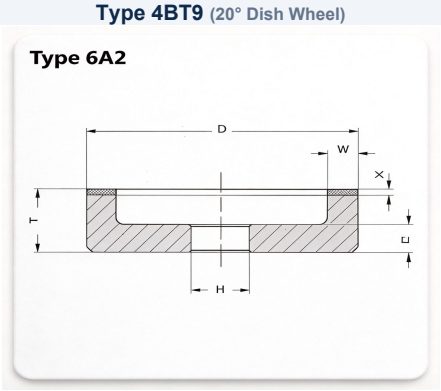

Params: D × T × H × U × X × 20°

Type 6A2 (Straight Cup Wheel)

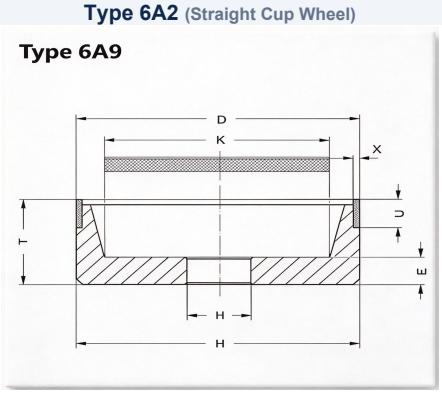

Params: D × T × H × W × X × E

Type 6A9 (Stepped Cup Wheel)

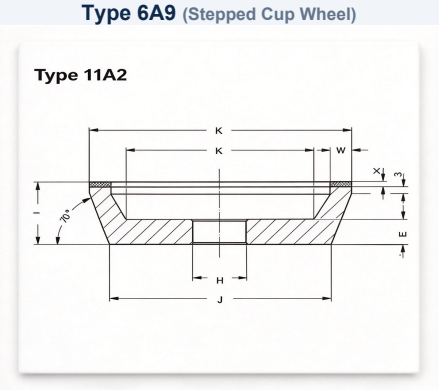

Params: D × T × H × W × X × L

Type 11V9 (Flaring Cup (70°))

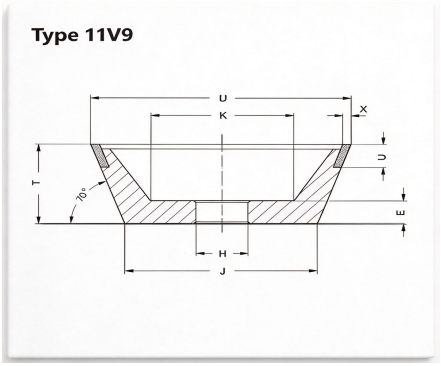

Params: D × T × H × W × X × 70°

Type 12V2 (Tapered Cup (20°/45°))

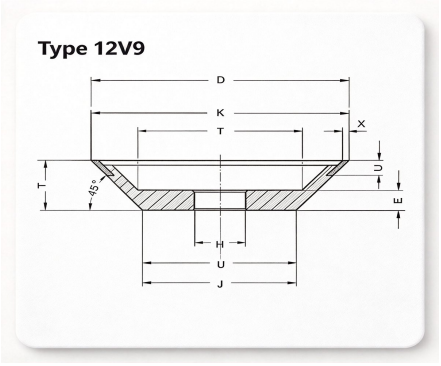

Params: D × T × H × W × X × E(°)

Type 12A2 (Dish Cup (20°/45°))

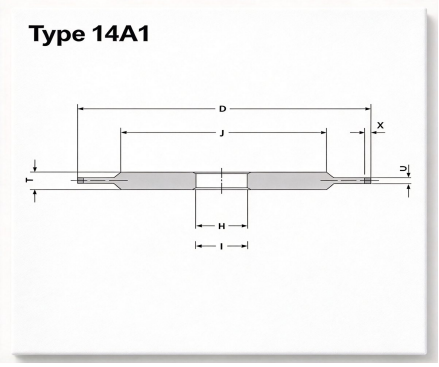

Params: D × T × H × W × X × E(°)

Shape Code	Standard Outer Dia. D (mm)	Thickness T (mm)	Bore H (mm)	Abrasive Layer W / U (mm)	Layer Depth X (mm)	Available Bonds
Type 1A1	50, 75, 100, 125, 150, 200, 250, 300, 350	3, 5, 8, 10, 15, 20, 25, 32, 40, 50	12.7, 20, 31.75, 32, 50.8, 75, 127	W = 3, 5, 8, 10, 15, 20, 25	X = 2, 3, 5, 6, 8, 10	Resin / Vitrified / Metal
Type 1V1	75, 100, 125, 150, 175, 200, 250	6, 8, 10, 12, 16, 20, 25	20, 25.4, 31.75, 32, 50.8	V = 15°, 20°, 30°, 45°, 60°, 90°	X = 3, 4, 5, 6, 8, 10	Resin / Vitrified
Type 14E1	75, 100, 125, 150, 175, 200	6, 8, 10, 12, 15, 16, 20	20, 31.75, 32, 50.8	V = 20°, 30°, 45°, 60°; U = 1.5–4	X = 3, 4, 5, 6, 8	Resin / Vitrified
Type 4BT9	75, 100, 125, 150, 175, 200	6, 8, 10, 12, 15	20, 25.4, 31.75, 32, 50.8	U = 1.5, 2.0, 3.0, 4.0 (20° Angle)	X = 3, 4, 5, 6	Resin / Vitrified
Type 6A2	100, 125, 150, 175, 200, 250	32, 35, 40, 50, 60	20, 31.75, 32, 50.8, 75, 127	W = 5, 8, 10, 15, 20, 25	X = 3, 4, 5, 6, 8	Resin / Metal / Vitrified
Type 6A9	100, 125, 150, 175, 200	25, 30, 35, 40, 50	20, 31.75, 32, 50.8	W = 3, 5, 8, 10, 12, 15	X = 3, 4, 5, 6, 8	Resin / Metal
Type 11V9	75, 100, 125, 150	30, 35, 40, 45, 50	20, 31.75, 32, 50.8	W = 2.0, 2.5, 3.0, 4.0, 5.0 (70°)	X = 6, 8, 10, 12, 15	Resin / Vitrified
Type 12V2	100, 125, 150	20, 22, 25, 28, 32	20, 31.75, 32, 50.8	W = 2.0, 2.5, 3.0, 4.0, 5.0 (20°/45°)	X = 3, 4, 5, 6, 8	Vitrified / Resin
Type 12A2	100, 125, 150, 175, 200, 250	10, 12, 15, 18, 22	20, 25.4, 31.75, 32, 50.8, 75	W = 5, 8, 10, 15, 20, 25 (20°/45°)	X = 2, 3, 4, 5, 6	Bronze Metal / Resin

AUTHENTIC PRODUCT GALLERY & TECHNICAL SPECIFICATIONS

ORIGINAL PHOTOS

Polished Original Product Photography | Resin, Ceramic (Vitrified) & Bronze Metal Bonds

CNC Machined Cores | ISO 9001:2015

Type 1A1 (Flat Diamond/CBN)

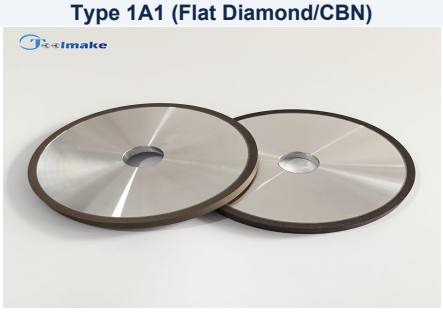

Resin Bond / Aluminum Core

Type 1V1 (Beveled Angle Wheel)



Precision Resin / Carbide Saw Sharpening

Type 14E1 (Double Beveled V)



CNC End Mill Fluting & Gashing

Type 11V9 (Flaring Cup 70°)



High Precision End Gash Grinding

Type 12V2 (Ceramic Bond Cup)



Vitrified Porous Bond / Cold Cutting

Type 12A2 (Bronze Metal Bond)



Heavy-Duty Bronze Bond / Ultra Wear Life

Technical Parameter	Standard Range / Options	Application & Processing Recommendations
Abrasive Types	• Diamond (SD / MD) • CBN (Cubic Boron Nitride / SBN)	Diamond: Tungsten Carbide, Ceramics, Glass, Sapphire, PCD/PCBN CBN: High-Speed Steel (HSS), Hardened Steel, Cast Iron, Bearing Steel
Bond Systems	• Resin Bond (Phenolic / Polyimide) • Vitrified / Ceramic Bond (Porous) • Bronze Metal Bond / Sintered	Resin: Sharp free-cutting, high elasticity, superior surface finish Vitrified: Controlled porosity, excellent self-cooling, ultra rigidity Bronze: Extreme shape retention, high impact & wear resistance
Grit Size Range	• Roughing: FEPA D181 - D126 (80# - 120#) • Semi-Finishing: D107 - D76 (140# - 200#) • Finishing: D64 - D46 (230# - 325#) • Micro-Polishing: M40 - M10 (400# - 1500#)	Select coarse grits (80#–120#) for maximum stock removal rate. Select medium grits (150#–200#) for general CNC flute & profile grinding. Select fine grits (320#–600#) for mirror razor-sharp cutting edge finishing.
Concentration	• 50%, 75% (Light stock / Large contact) • 100% (Standard all-purpose CNC) • 125%, 150% (Heavy-duty / Long life)	Standard concentration is 100% (4.4 ct/cm³). 125%–150% is recommended for narrow contact areas and heavy-duty profile shape retention.
Core Materials	• Aerospace Aluminum Alloy (CNC Machined) • Precision Steel (45# / Tool Steel) • Bakelite / Composite Core	All wheel cores are 100% precision CNC turned and dynamic balanced to G1.0 grade, ensuring zero runout and vibration-free operation at high RPM.

CUSTOM ORDERING FORMAT: [Shape Code] — [D × T × H × W/U × X × Angle] — [Abrasive: Diamond/CBN] — [Grit #] — [Concentration %] — [Bond Type]
Example Order: Type 11V9 — 100 × 35 × 20 × 3 × 10 (70°) — Diamond — 200# — 100% — Resin Bond (Aluminum Core)